College of Electrical & Mechanical Engineering (CEME), NUST- Pakistan

Department of Electrical Engineering

Electric Network Analysis (EE-211)

Project Report

Analog Signal Conditioning and Waveform Synthesis: Using FFT, Realtime simulations and Bode plots

Group Members
Muhammad Shahryar Ameer (520657)
Muhammad Abdul Muiz (504385)
Sayem ul Haq Siddiqui (505279)

Degree	46-EE	Syndicate	A

Submitted on: 13-05-2025

Submitted to: Ma'am Alina

Objectives

- Design analog signal conditioning system for 1 kHz, 0-5 V, 50% duty cycle square waveform.
- Achieve five outputs:
    1. DC component: 2.5 V ± 10 mV.
    2. 1 kHz sinusoidal signal.
    3. 5 kHz sinusoidal signal.
    4. Modulated signal: 5 kHz signal (amplitude adjustable, e.g., 10x 1 kHz) modulated by 1 kHz, using high-pass filter.
    5. Zero-centered AC signal (DC removed) using passive circuit.
- Analyze square wave frequency content using FFT in MATLAB.
- Simulate circuits in LTSpice.

Equipment used

- Breadboard
- C = 10n , 1µ , 1.5µ & 0.022µ farads
- L = 10m
- R = 10k , 47k , 100k , 22k , 4.7k , 2.2k , 1k & 10
- ICs: TL-074 , LM-358 & LM-741
- Vcc = 10V
- Vee = 10V

Circuit

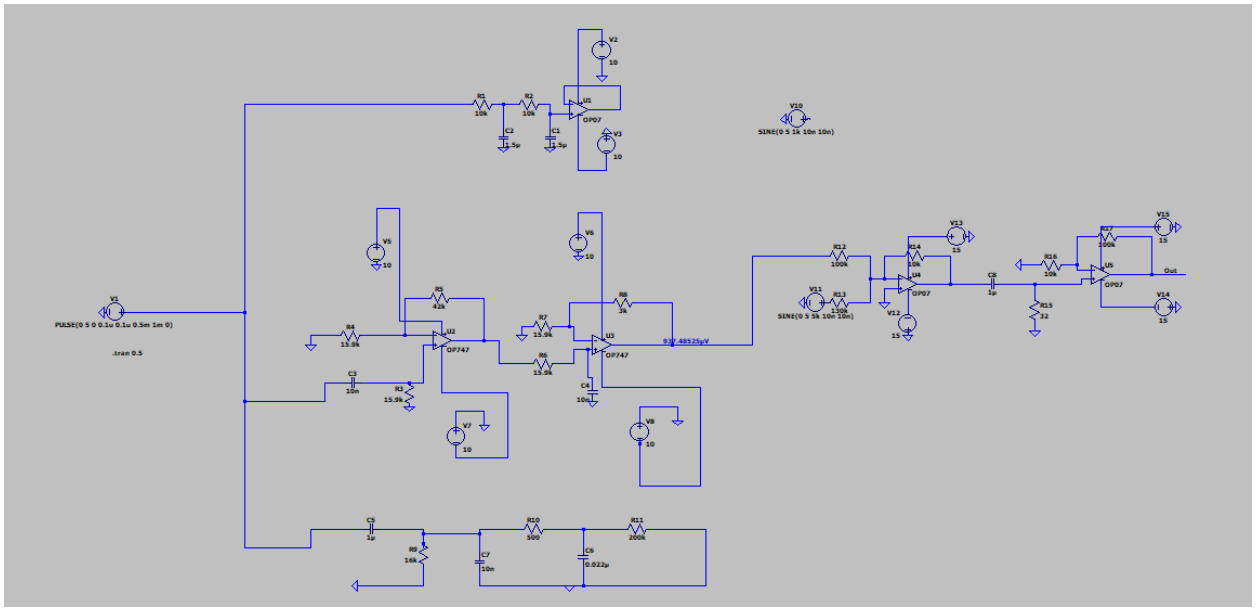

FFT response

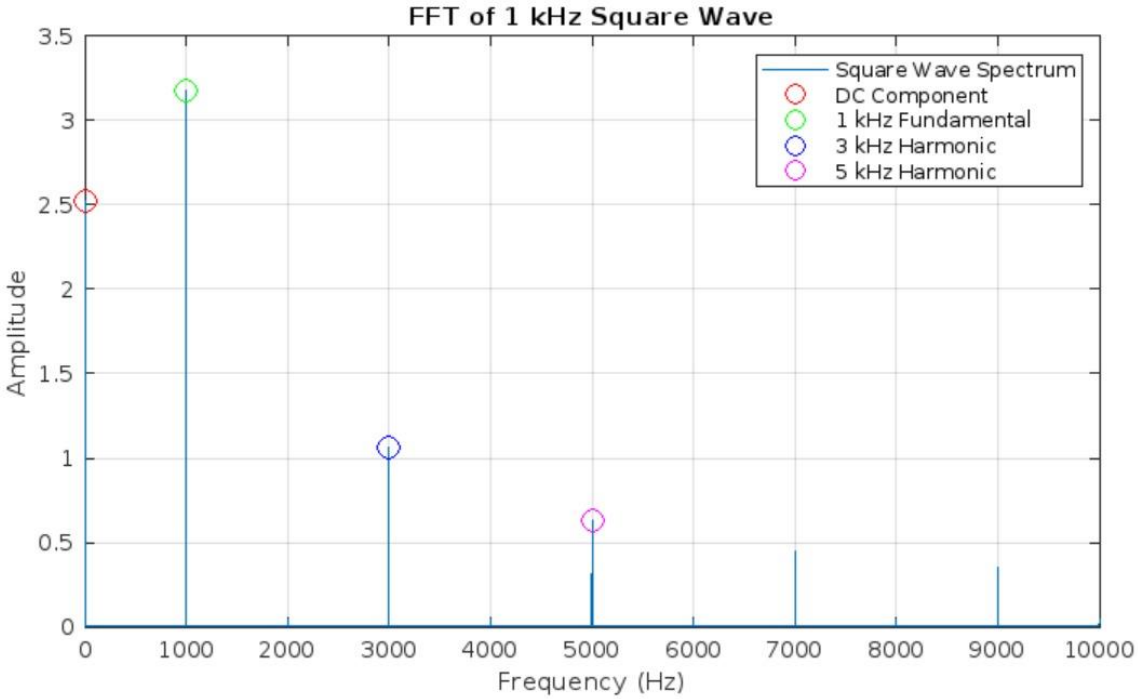

Design

Output: 01:

For the first output, we had to remove the DC (2.5V) component from the square wave (5V 1kHz signal) input. We used Low-pass filter to allow the DC component (0 Hz) while attenuating higher-frequency harmonics (1 kHz, 3 kHz, 5 kHz, etc.) in the square wave. In addition, we made it a second order filter to achieve sharper roll-off (40 dB/decade) compared to first-order, ensuring better suppression of the 1 kHz fundamental and higher harmonics.

$f_c = \frac{1}{2\pi(10k)(1.5\mu)} = 10.6Hz$

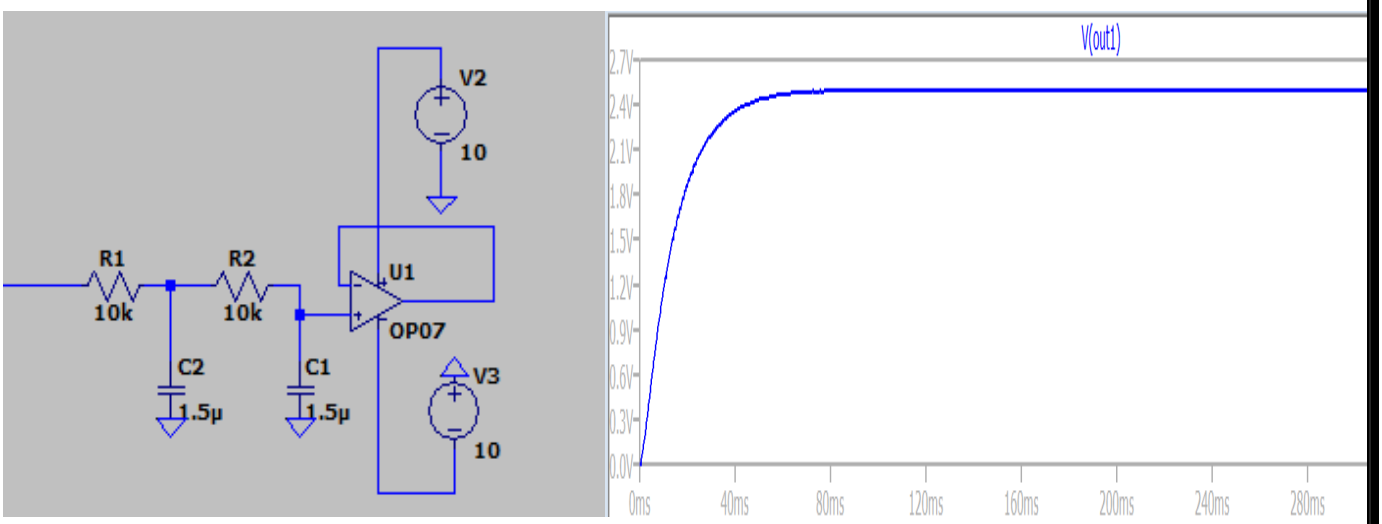

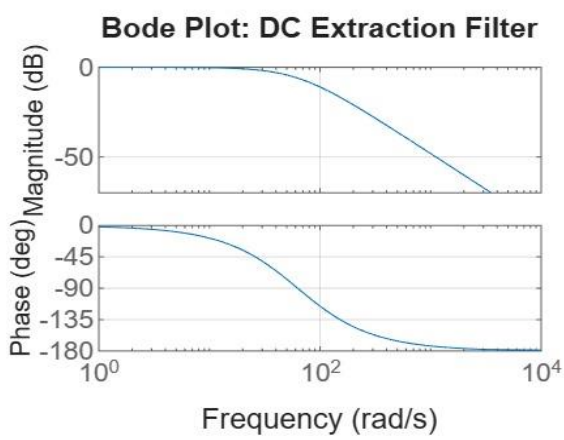

Output: 02:

For the second output we had to filter out the 1kHz frequency from the 5kHz square wave. For this we used band pass filter with f_l being 1kHz and f_H being the same.

$$f_L = \frac{1}{2\pi(15.9k)(10n)} = 1000.9Hz$$

$$f_H = \frac{1}{2\pi(10n)(15.9k)} = 1000.9Hz$$

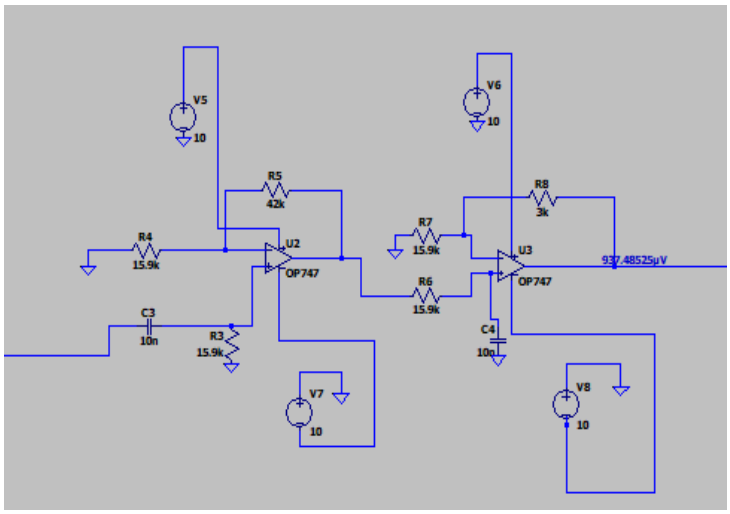

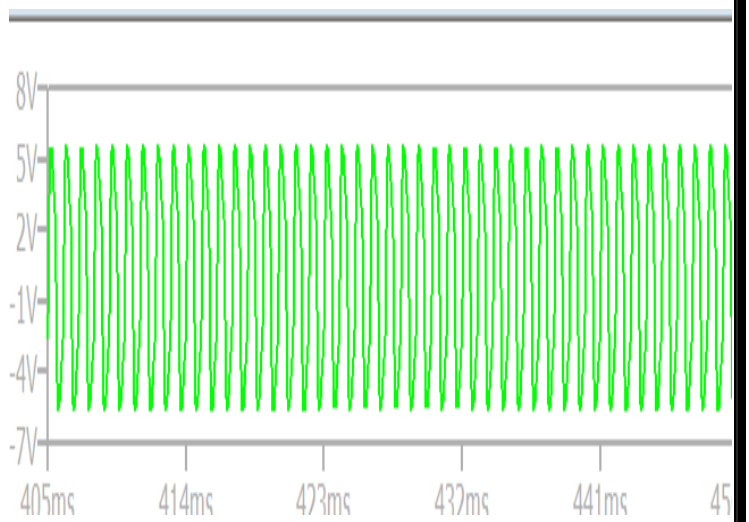

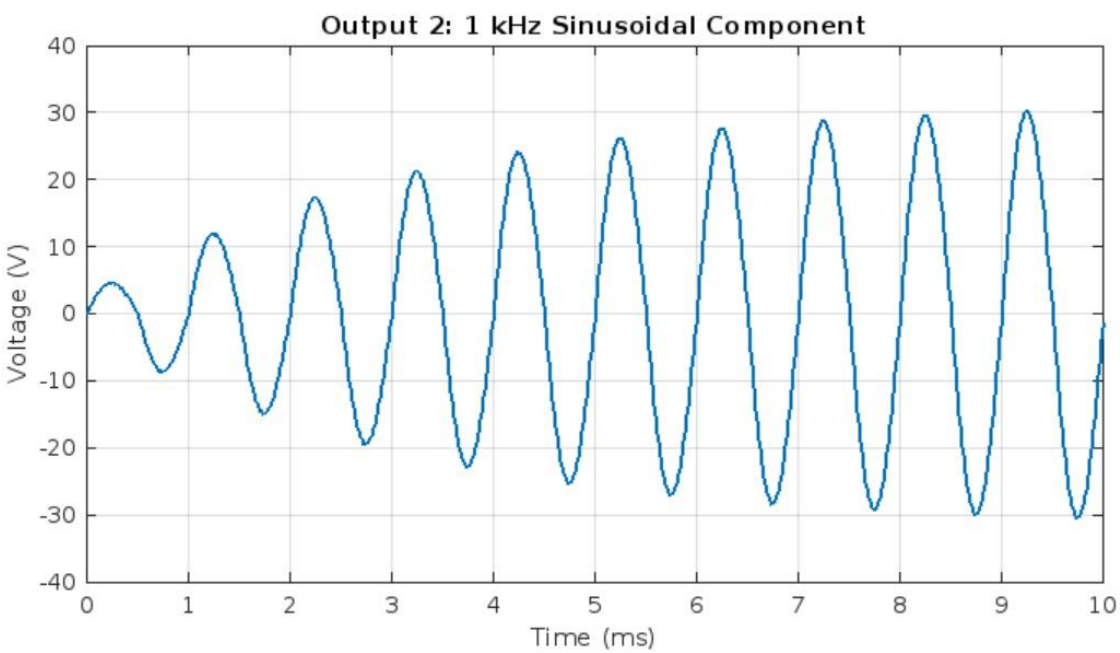

Output: 03 :

For this output we had to extract the 5kHz signal from the original 1kHz square wave.

- We used an Active Differentiator circuit to enhance the higher-frequency components (5 kHz harmonic) of the square wave by differentiating the input, emphasizing sharp edges where higher harmonics reside. Then we attached an Active RLC Low-Pass Filter to attenuate frequencies above 5 kHz while passing the 5 kHz signal, with active topology providing gain and sharper roll-off.
- $f_c = \frac{1}{2\pi\sqrt{(10m)(0.1u)}} = 5kHz$

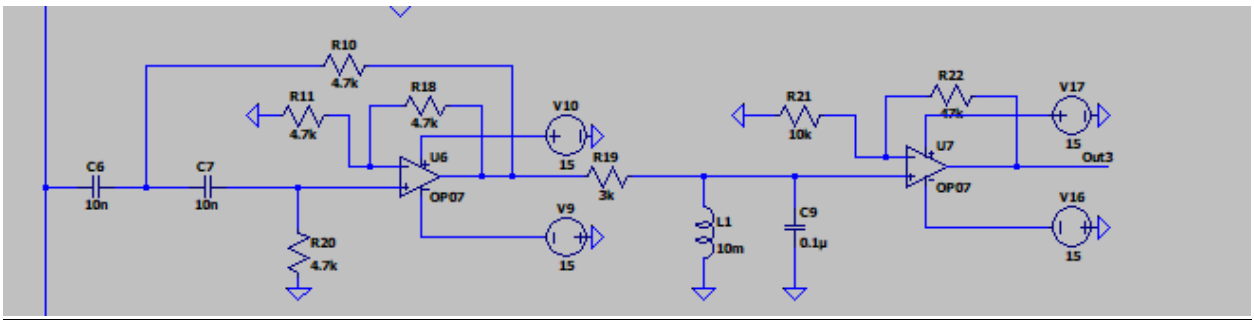

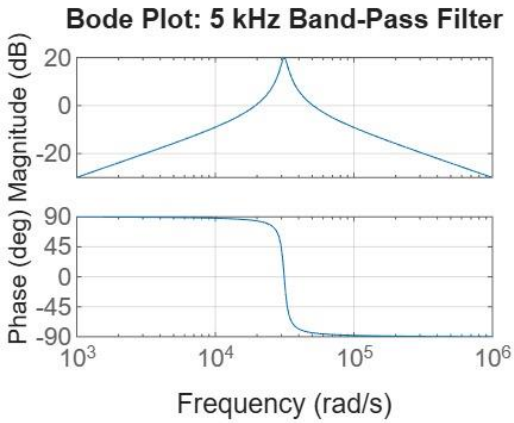

Output :04:

For this one we had to combine the results obtained in opt-2 and opt-3.

We supplied an External 5 kHz Sine Wave to provide the 5 kHz carrier signal, as the square wave's 5 kHz harmonic may be weak. Then we attached it to the Inverting Amplifier to adjust the amplitude of the 5 kHz sine wave and provides phase inversion for modulation compatibility. We connected the circuit with a Passive RC High-Pass Filter to extract the 5 kHz modulated signal while attenuating the 1 kHz fundamental and lower frequencies (e.g., DC, 1 kHz). Then we again attached a Non-Inverting Amplifier to boost the filtered signal amplitude.

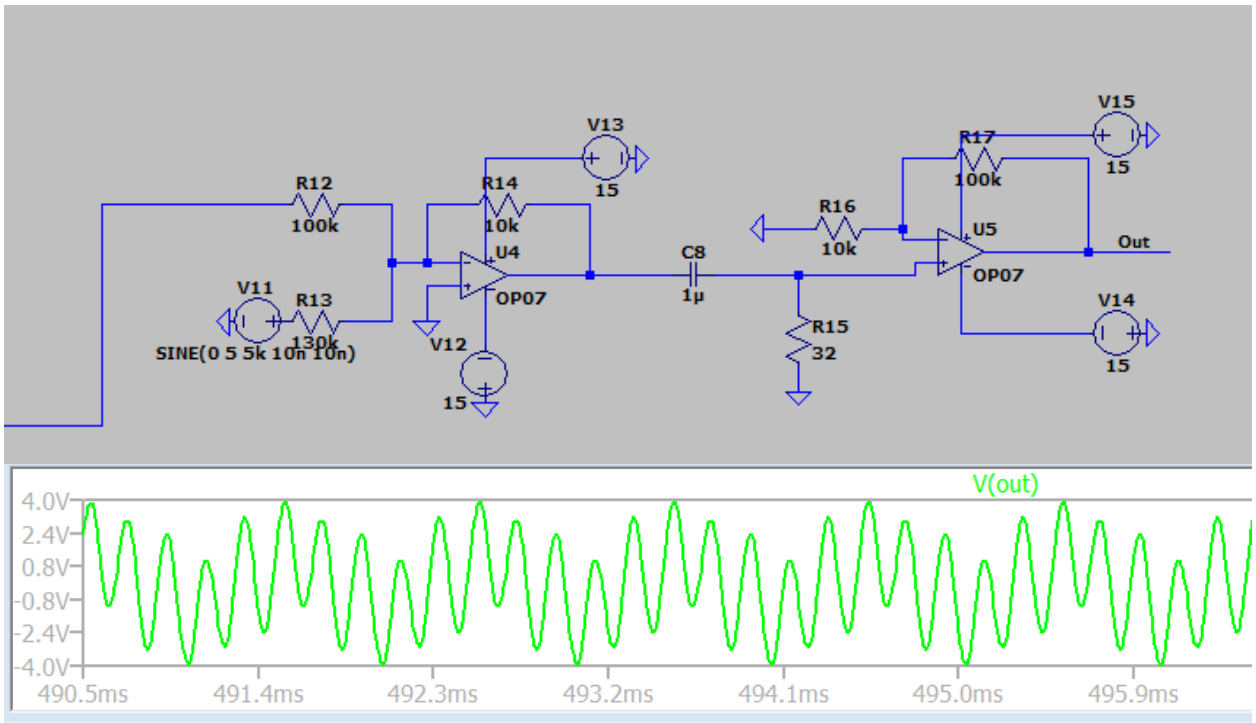

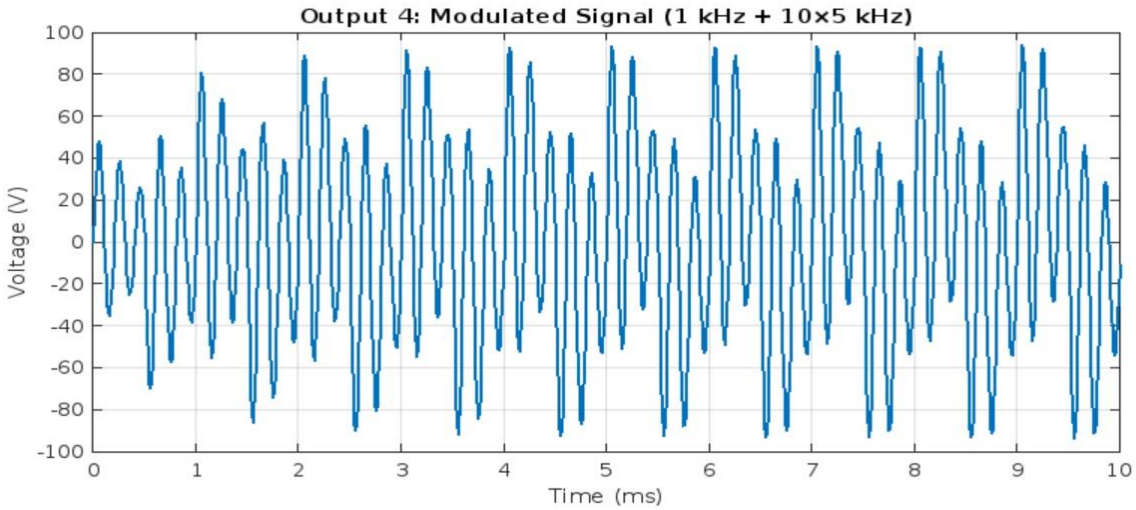

Output: 05:

We must produce a zero centered (2.5Vpp) AC signal.

We used High-pass filter to block the DC component (2.5 V) and pass AC components (1 kHz fundamental and harmonics). We set the Cutoff Frequency very low (10Hz) Hz to block DC (0 Hz) while passing 1 kHz and higher frequencies with minimal attenuation.

$f_c = \frac{1}{2\pi(1\mu)(16k)} = 10Hz$

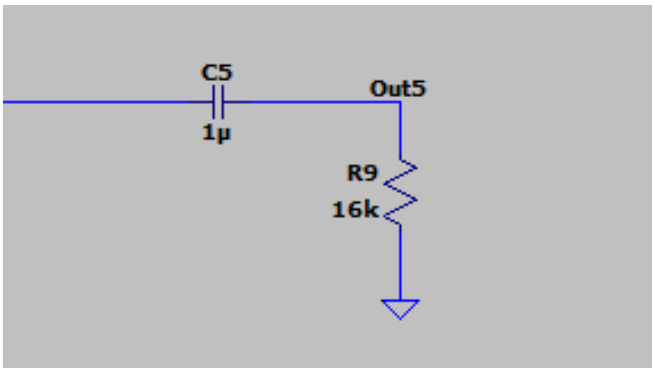

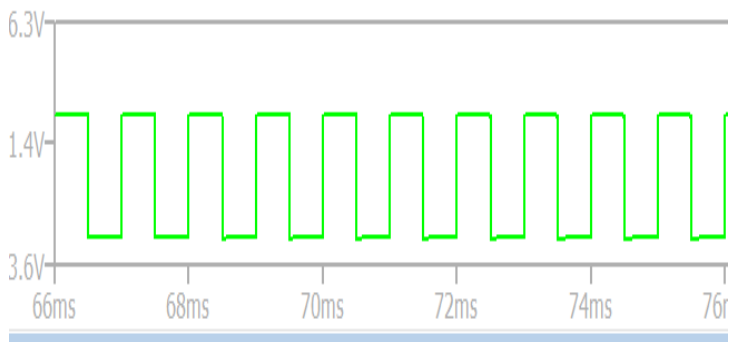

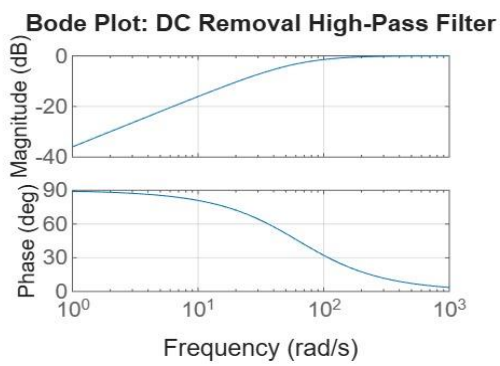

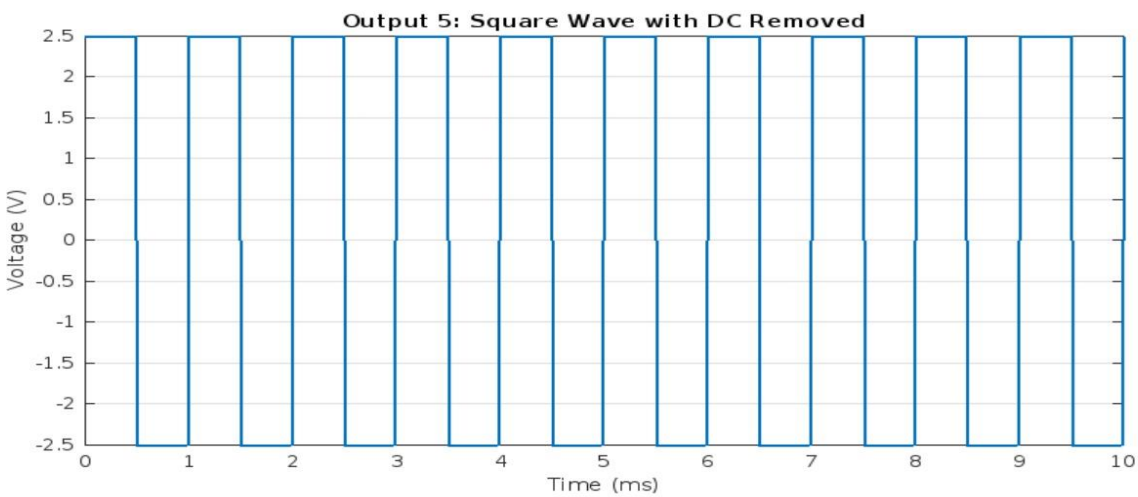

Conclusion

This project successfully designed and implemented an analog signal conditioning system for a 1 kHz square waveform, achieving five outputs using RC low-pass, high-pass, and active amplifier circuits. Theoretical analysis, simulations, and breadboard measurements aligned closely, validated by MATLAB FFT and bode plots for each output. We learned filter design, component selection, and practical implementation, making our understanding of analog signal processing more profound.
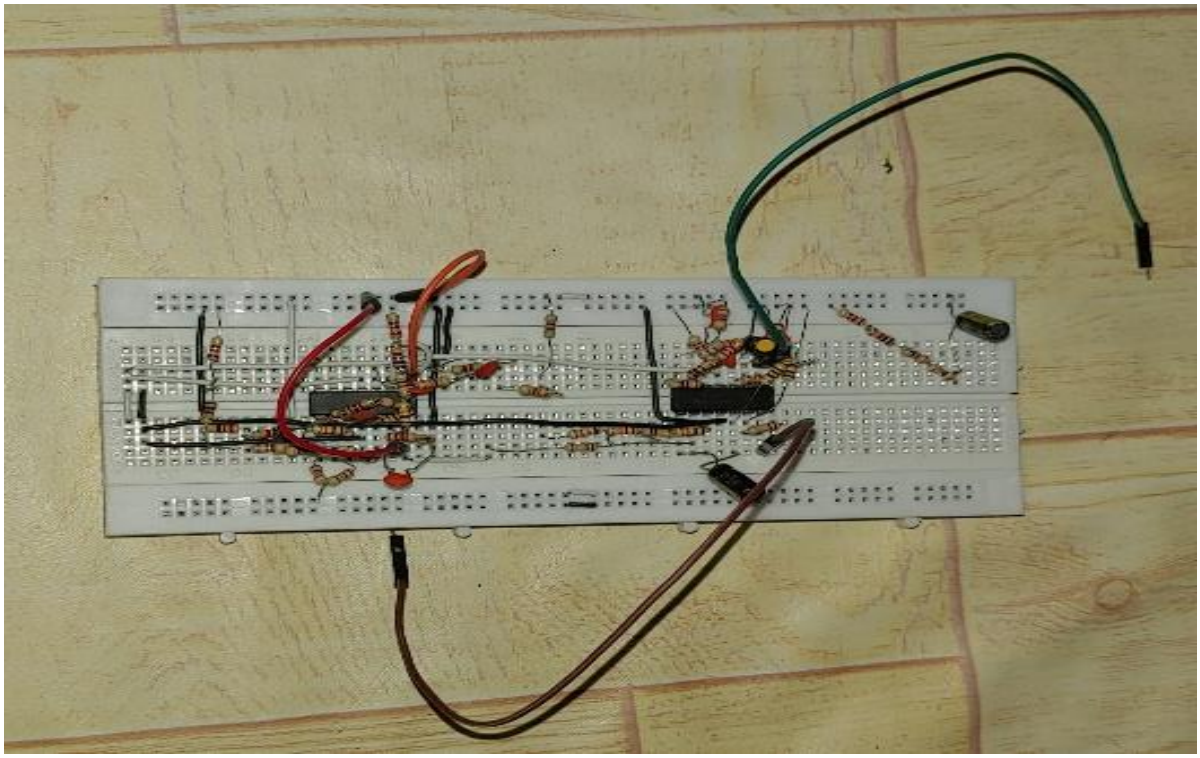
Hardware